Emission Control System > General Information > Description and Operation

Description

Emissions Control System consists of three major systems.

- The Crankcase Emission Control System prevents blow-by gas from releasing into the atmosphere. This system recycles gas back into the intake manifold (Closed Crankcase Ventilation Type).
- The Evaporative Emission Control System prevents evaporative gas from releasing into the atmosphere. This system burns gas at appropriate engine operating condition after gathering it in the canister.
- The Exhaust Emission Control System converts the three pollutants [hydrocarbons (HC), carbon monoxide (CO), and oxides of nitrogen (NOx)] into harmless substances by using the 3-way catalytic converter.

Emission Control System > General Information > Specifications

Specifications

Purge Control Solenoid Valve (PCSV)

▹ Specification

Item	Specification
Coil Resistance (Ω)	19.0 ~ 22.0 [20°C(68°F)]

Fuel Tank Pressure Sensor (FTPS)

▹ Type: Piezo-Resistive Pressure Sensor

▹ Specification

Pressure [kPa (kgf/cm², in H2O)]	Output Voltage (V)
-6.67 (-0.068, -26.8)	0.5
0	2.5
+6.67 (0.068, 26.8)	4.5

Canister Close Valve (CCV)

▹ Specification

Item	Specification
Coil Resistance (Ω)	19.8 ~ 21.8 [20°C(68°F)]

Tightening Torques

Item	kgf.m	N.m	lb-ft
Positive crankcase ventilation valve installation	0.8 ~ 1.2	7.8 ~ 11.8	5.8 ~ 8.7
Canister installation bolt/nut	0.4 ~ 0.6	3.9 ~ 5.9	2.9 ~ 4.3

Emission Control System > General Information > Troubleshooting

Troubleshooting

Symptom	Suspect area
Engine will not start or struggle to start	Vapor hose damaged or disconnected
Engine struggles to start	Malfunction of the Purge Control Solenoid Valve
Rough idle or engine stalls	Vapor hose damaged or disconnected
	Malfunction of the PCV valve

mcx30.com

Excessive oil consumption	Positive crankcase ventilation line clogged

Emission Control System > General Information > Schematic Diagrams

Schematic Diagram

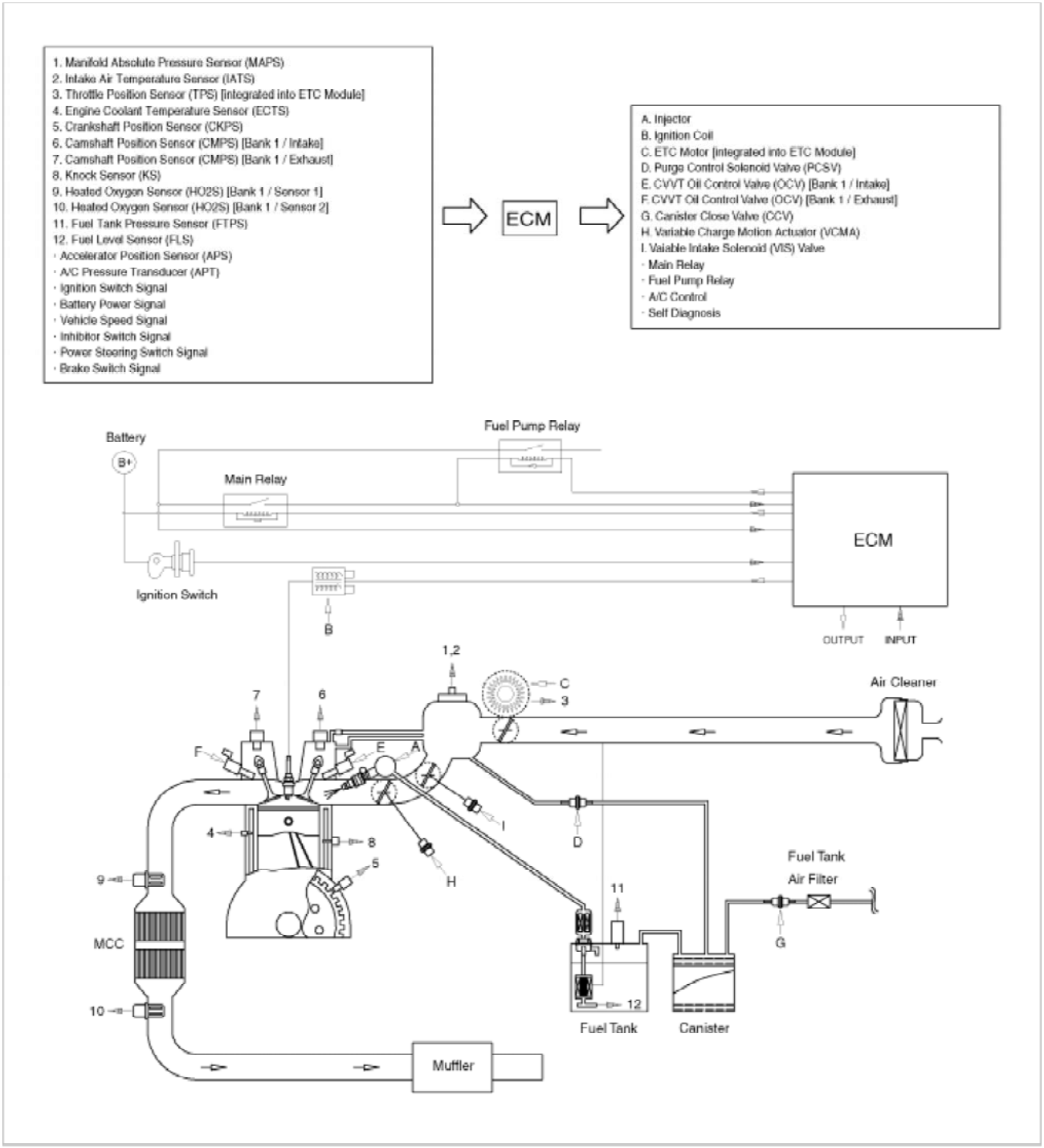

Emission Control System > General Information > Components and Components Location

Components Location

mcx30.com

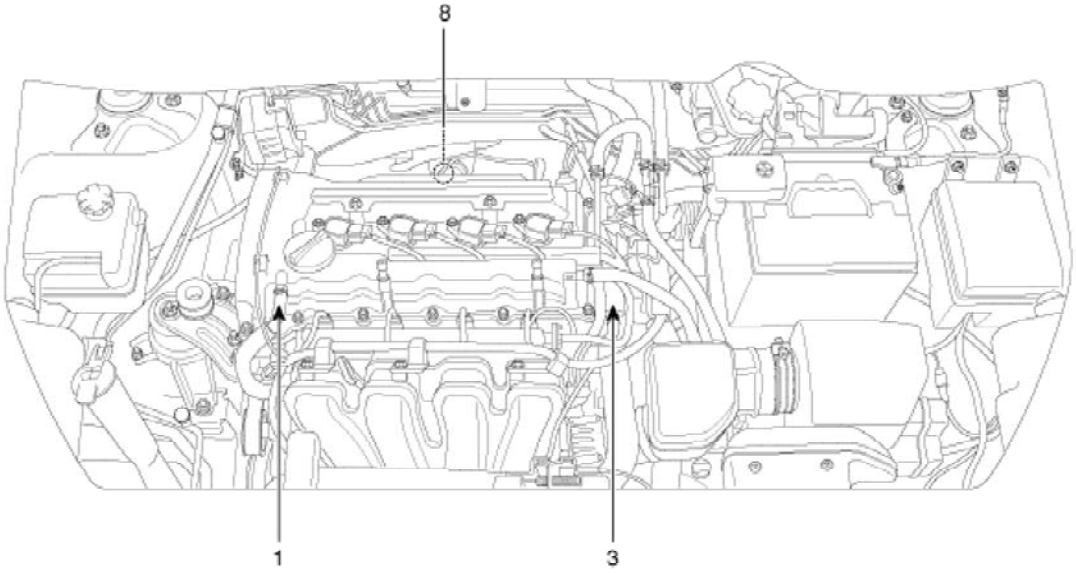

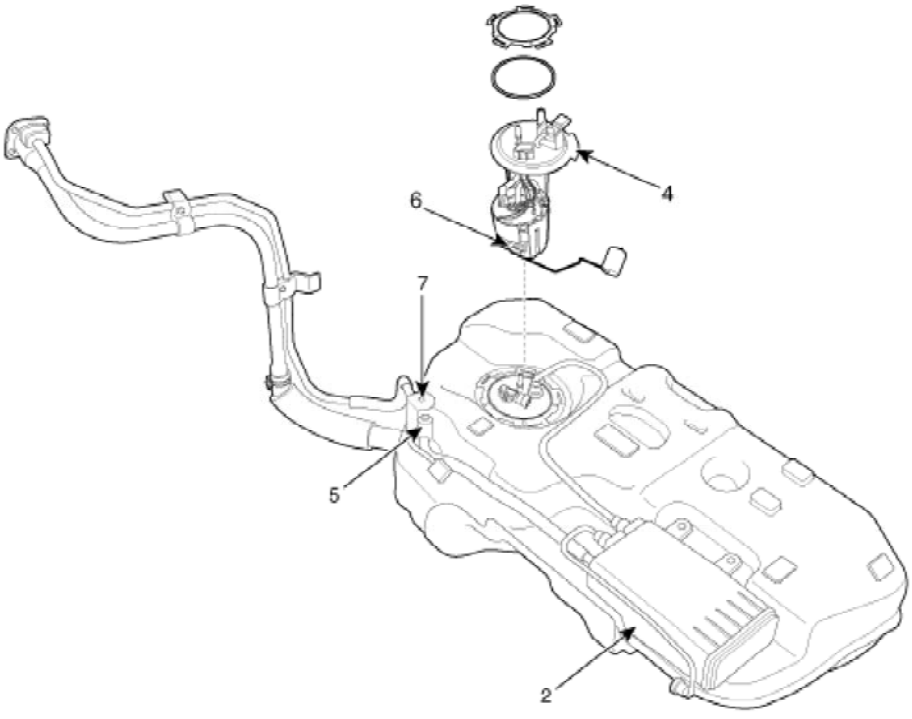

1. PCV valve 2. Canister 3. Purge control solenoid valve (PCSV) 4. Fuel tank pressure sensor (FTPS)	5. Canister close valve (CCV) 6. Fuel level sensor (FLS) 7. Fuel tank air filter 8. Catalytic converter

1. PCV Valve	2. Canister

mcx30.com

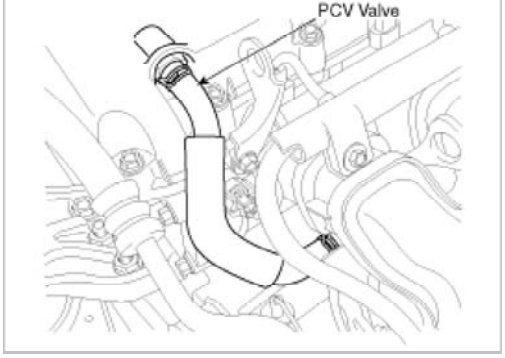	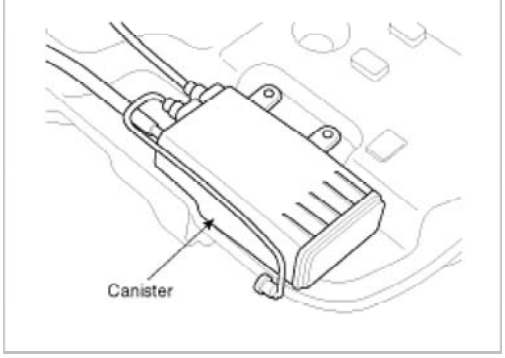
3. Purge Control Solenoid Valve (PCSV)	4. Fuel Tank Pressure Sensor (FTPS)
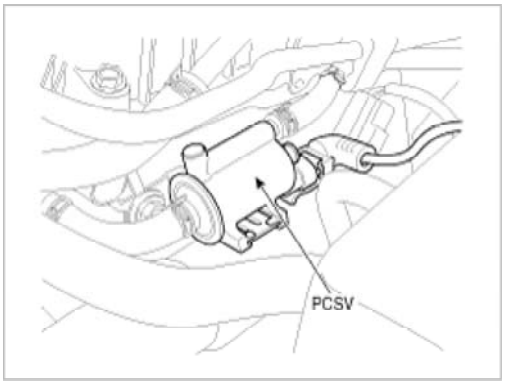	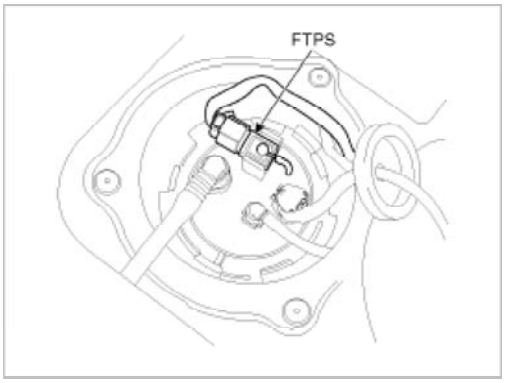
5. Canister Close Valve (CCV) 7. Fuel Tank Air Filter	6. Fuel Level Sensor (FLS)
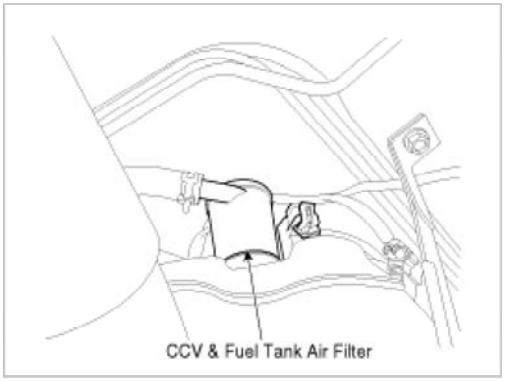	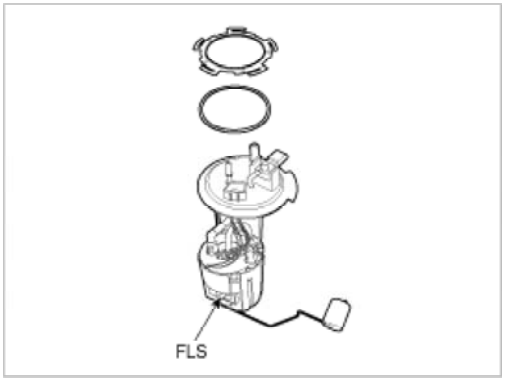
8. Catalytic Converter [SULEV]	8. Catalytic Converter [ULEV]
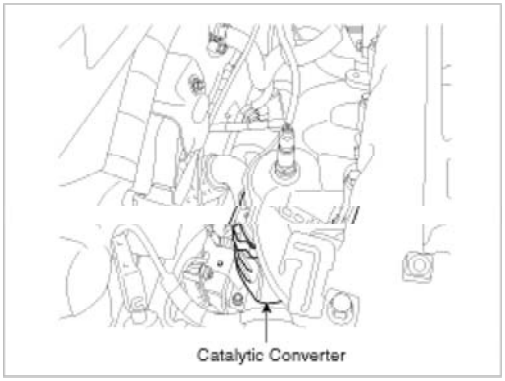	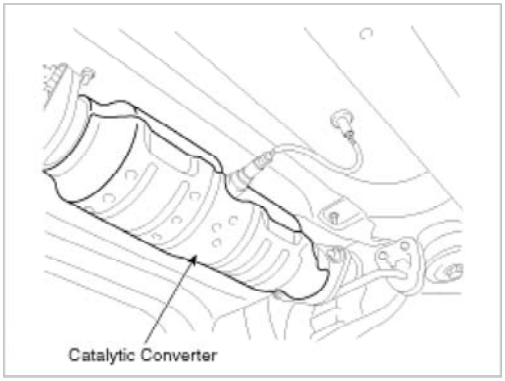

Emission Control System > Crankcase Emission Control System > Schematic Diagrams

Schematic Diagram

mcx30.com

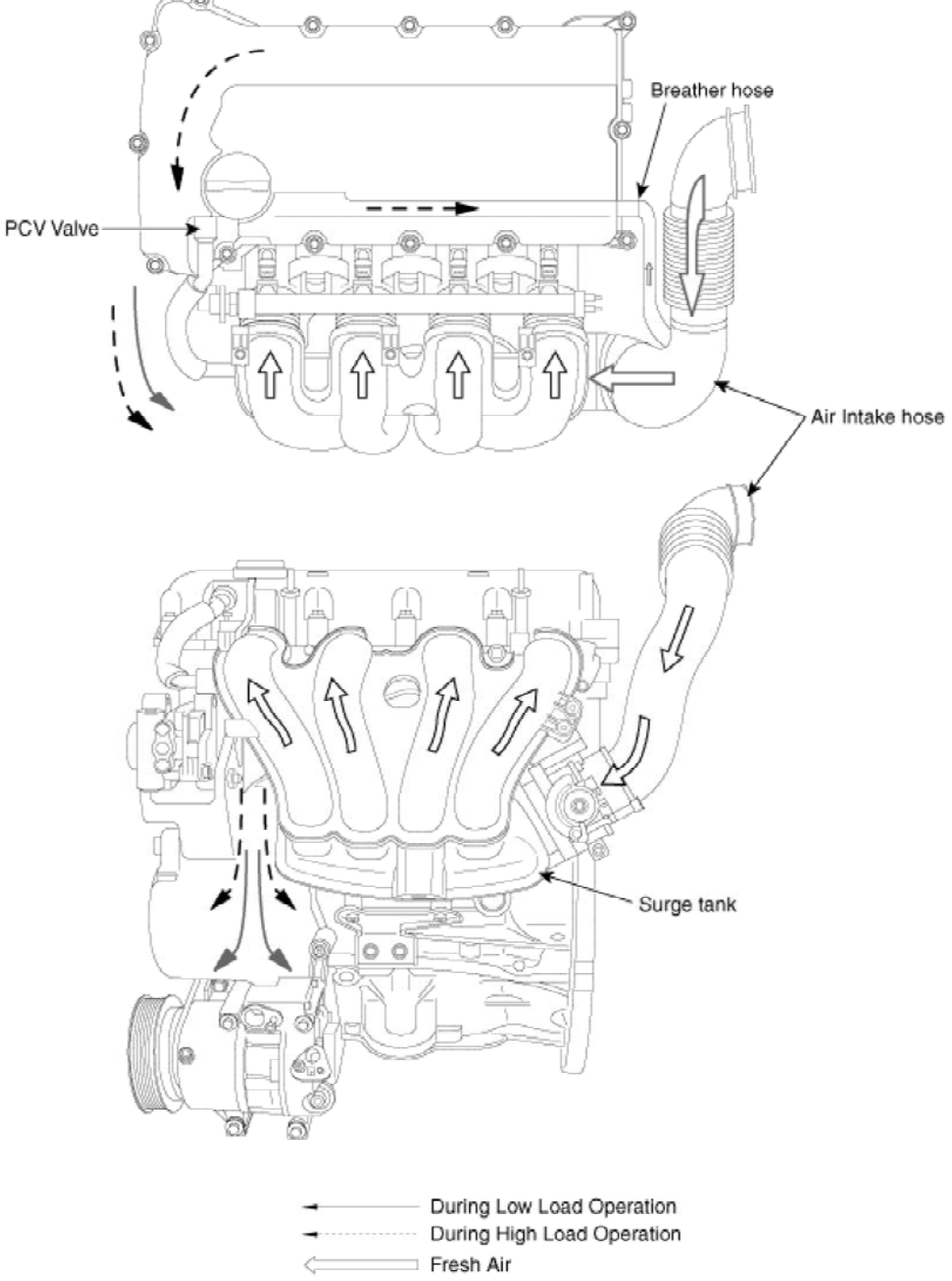

Emission Control System > Crankcase Emission Control System > Repair procedures

Inspection

1. After disconnecting the vapor hose from the PCV valve, remove the PCV valve.
2. Reconnect the PCV valve to the vapor hose.
3. Run the engine at idle, then put a finger over the open end of the PCV valve and make sure that intake manifold vacuum can be felt.

> **NOTE**
>
> The plunger inside the PCV valve will move back and forth at vacuum.

mcx30.com

4. If the vacuum is not felt inspect PCV operation, if operating correctly clean or replace the vapor hose.

Emission Control System > Crankcase Emission Control System > Positive Crankcase Ventilation (PCV) Valve > Description and Operation

Operation Principle

Engine Condition	Not Running	Idling or Decelerating	Normal Operation	Accelerating and High Load
Vacuum in Intake Manifold	0	High	Moderate	Low
PCV Valve	Close	Slightly Open	Properly Open	Fully Open
Blow-by Gas Flow	0	Small	Medium	Large
Schematic Diagram	Intake Manifold 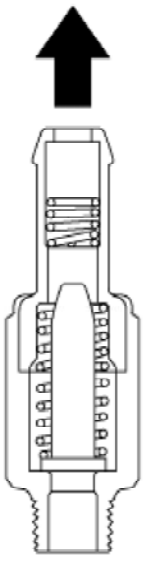	Intake Manifold 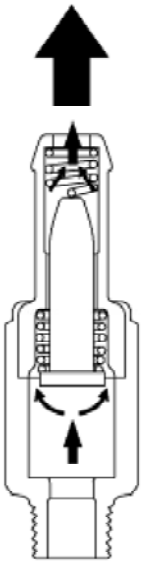	Intake Manifold 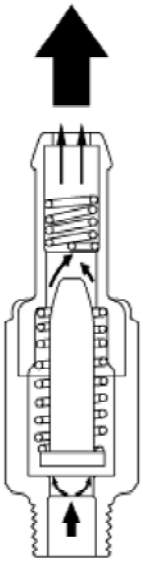	Intake Manifold 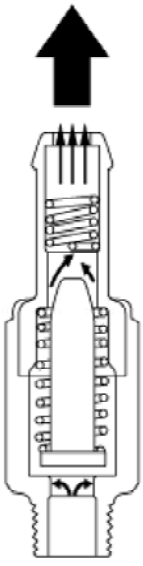

Emission Control System > Crankcase Emission Control System > Positive Crankcase Ventilation (PCV) Valve > Repair procedures

Removal

1. Disconnect the vapor hose (A).
2. Remove the PCV valve (B).

mcx30.com

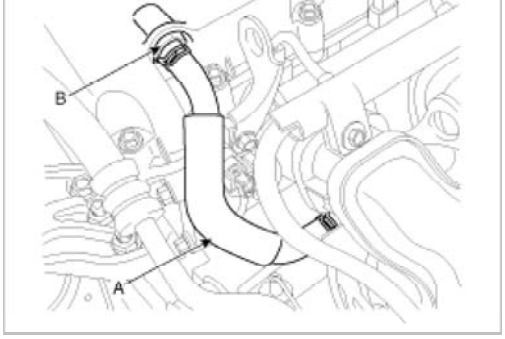

Inspection

1. Insert a thin stick (A) into the PCV valve (B) from the threaded side to check that the plunger movement.

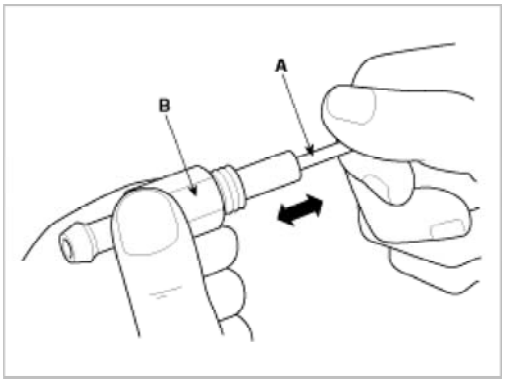

NOTE

If the plunger does not move (PCV valve is clogged), clean or replace the valve.

Installation

1. Installation is reverse of removal.

PCV Valve installation:
7.8 ~ 11.8 N.m (0.8 ~ 1.2 kgf.m, 5.8 ~ 8.7 lb-ft)

Emission Control System > Evaporative Emission Control System > Description and Operation

Description

The Evaporative Emission Control System prevents fuel vapor stored in fuel tank from vaporizing into the atmosphere. When the fuel evaporates in the fuel tank, the vapor passes through vent hoses or tubes to a canister filled with charcoal. The canister temporarily holds the vapor in the charcoal. The ECM will control the system in oder to draw the gathered vapor into the combustion chambers during certain operating conditions. Engine manifold vacuum is used to draw the vapor into intake manifold.

Emission Control System > Evaporative Emission Control System > Schematic Diagrams

Schematic Diagram

mcx30.com

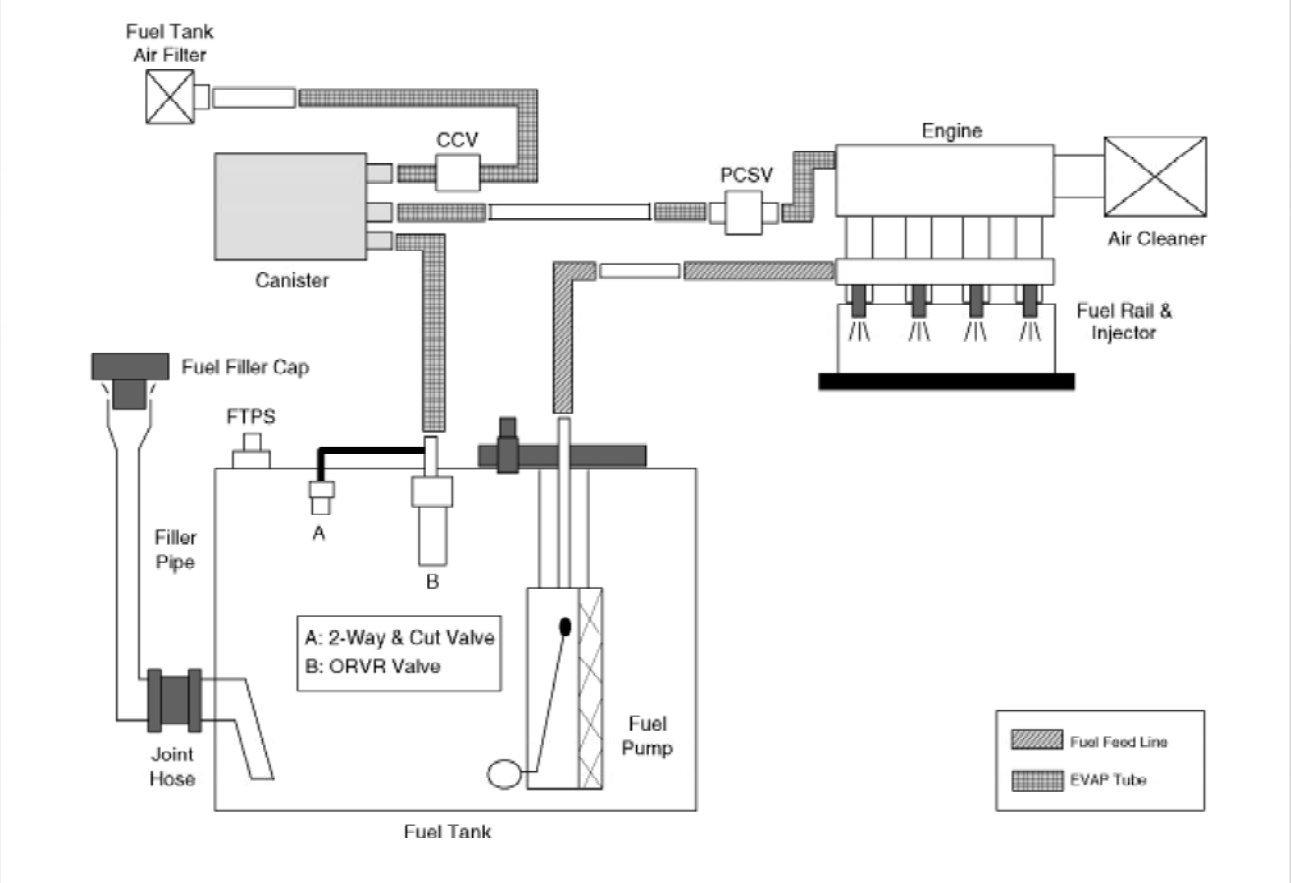

Canister

The Canister is filled with charcoal and absorbs evaporated fuel vapor from the fuel tank. The gathered fuel vapor in canister is drawn into the intake manifold by the ECM/PCM when appropriate conditions are set.

Purge Control Solenoid Valve (PCSV)

The Purge Control Solenoid Valve (PCSV) is installed in the passage connecting the canister to the intake manifold. It is a duty type solenoid valve and is operated by ECM/PCM signal.
To draw the absorbed vapor into the intake manifold, the ECM/PCM will open the PCSV, otherwise the passage remains closed.

Fuel Filler Cap

A ratchet tightening device in the threaded fuel filler cap reduces the chances of incorrect installation, when sealing the fuel filler. After the gasket on the fuel filler cap and the fill neck flange make contact, the ratchet produces a loud clicking noise indicating the seal has been set.

Fuel Tank Pressure Sensor (FTPS)

The Fuel Tank Pressure Sensor (FTPS) is an integral part of the monitoring system. The FTPS checks Purge Control Solenoid Valve (PCSV) operation and leaks in the Evaporative Emission Control System by monitoring pressure and vacuum level in the fuel tank during PCSV operating cycles.

Canister Close Valve (CCV)

The Canister Close Valve (CCV) is located between the canister and the fuel tank air filter. It closes off the air inlet to the canister for the Evaporative Emissions System and also prevents fuel vapors from escaping from the Canister when the vehicle is not operating.

Evaporative System Monitoring

The Evaporative Emission Control Monitoring System monitors fuel vapor generation, evacuation, and a leakage check step. At first, the OBD-II system checks if vapor generation due to fuel temperature is small enough to start monitoring. Then it evacuates the evaporative system by means of PCSV with ramp in order to maintain a certain vacuum level. The final step is to check if there is vacuum loss by any leakage of the system.

Vapor Generation Checking

During the stabilization period, the PCSV and the CCV are closed. The system pressure is measured as starting pressure

mcx30.com

starting pressure is calculated. If this difference (DP_B - DP_A) is bigger than the threshold, there should be excessive vapor pressure and the monitor is aborted for next check. On the contrary, if the difference is lower than the negative threshold, the PCSV is regarded as having a malfunction such as clogged at open position.

Evacuation

The PCSV is opened with a certain ramp for the pressure to reach down to a certain level. If the pressure can't be lowered below a threshold, the system is regarded as having a fuel cap-open or having a large leak.

Leaking Checking

The PCSV is closed and the system waits for a period to get stabilized pressure. During checking period (T2), the system measures the beginning and the end of the system pressure (DP_C, DP_D). The diagnosis value is the pressure difference corrected by the natural vapor generation (DP_B - DP_A) rate from the vapor generation check step.

Evaporative System Monitoring

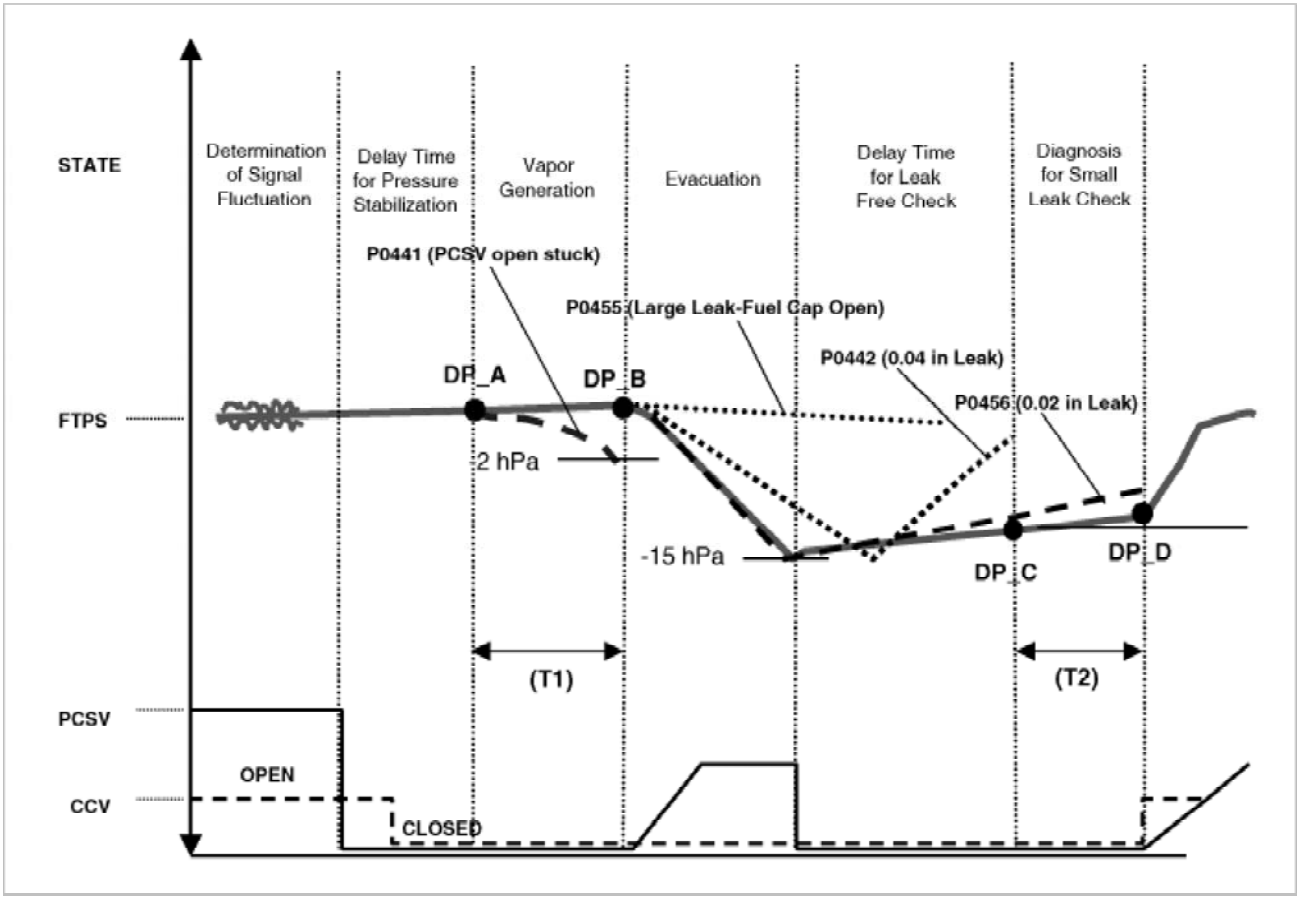

Evaporative And ORVR Emission Control System

This system consists of a fill vent valve, fuel shut-off valve, fuel cut valve (for roll over), two way valve (pressure/vacuum relief), fuel liquid/vapor separator which is installed beside the filler pipe, charcoal canister which is mounted under the rear floor LH side member and protector, tubes and miscellaneous connections.

While refueling, ambient air is drawn into the filler pipe so as not to emit fuel vapors in the air. The fuel vapor in the tank is then forced to flow into the canister via the fill vent valve. The fuel liquid/vapor separator isolates liquid fuel and passes the pure vapor to the charcoal canister.

While the engine is operating, the trapped vapor in the canister is drawn into the intake manifold and then into the engine combustion chamber. Using this purge process, the charcoal canister is purged and recovers its absorbing capability.

mcx30.com

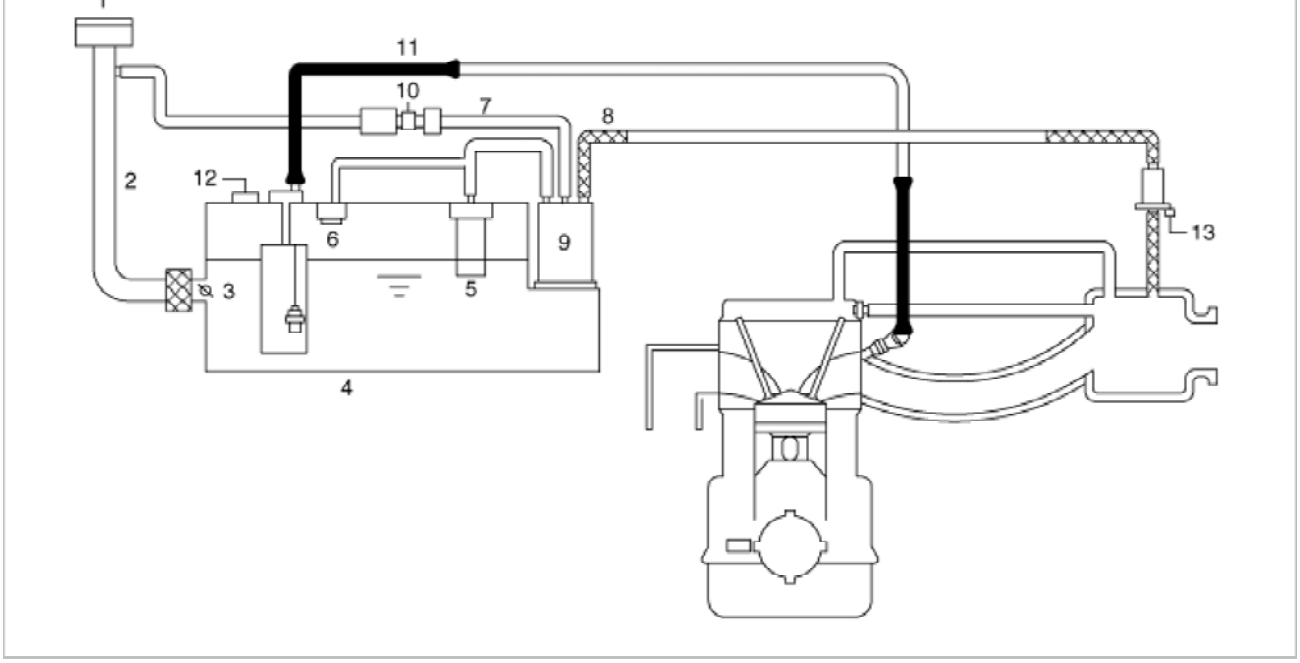

1. Fuel Filler Cap 2. Fuel Filler Pipe 3. Fuel Shut-OFF Valve 4. Fuel Tank 5. ORVR Valve 6. 2-Way & Cut Valve 7. Evaporative Hose	8. Evaporative Hose 9. Canister 10. Canister Close Valve (CCV) 11. Fuel Feed Line 12. Fuel Tank Pressure Sensor (FTPS) 13. Purge Control Solenoid Valve (PCSV)

Emission Control System > Evaporative Emission Control System > Repair procedures

Inspection

[System Inspection]

1. Disconnect the vapor hose from the intake manifold and connect a vacuum pump to the nipple on the intake manifold.
2. Check the following points with applied vacuum using a vacuum pump.
   · At Cold Engine [Engine Coolant Temperature < 60°C(140°F)]

Engine Operating Condition	Applied Vacuum	Result
Idle	14.5 inHg (0.5 kgf/cm², 49.0 kPa)	Vacuum is held
3,000rpm		

   · At Warmed Engine [Engine Coolant Temperature > 80°C(176°F)]

Engine Operating Condition	Applied Vacuum	Result
Idle	14.5 inHg (0.5 kgf/cm², 49.0 kPa)	Vacuum is held
Within 3 minutes after engine start at 3,000 rpm	Try to apply vacuum	Vacuum is released
In 3 minutes after engine start at 3,000 rpm	14.5 inHg (0.5 kgf/cm², 49.0 kPa)	Vacuum will be held momentarily, after which, it will be released

mcx30.com

1. Turn ignition switch OFF and disconnect the negative (-) battery cable.
2. Disconnect the PCSV connector (A).
3. Disconnect the vapor hose (B) which is connected to the intake manifold from the PCSV.

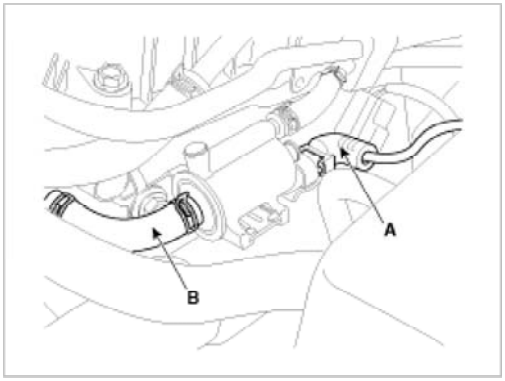

4. After connecting a vacuum pump to the nipple, apply vacuum.
5. With the PCSV control line grounded, check the valve operation with battery voltage applied to the PCSV(Open) and removed(Closed).

Battery Voltage	Valve	Vacuum
Connected	Open	Released
Disconnected	Close	Maintained

6. Measure the coil resistance of the PCSV.

Specifications:
2.4 DOHC: 19.0 ~ 22.0Ω [20°C(68°F)]
3.5 V6: 22.0 ~ 26.0 [20°C(68°F)]

[EVAP. Leakage Test]

1. Select "Evap. Leakage Test".

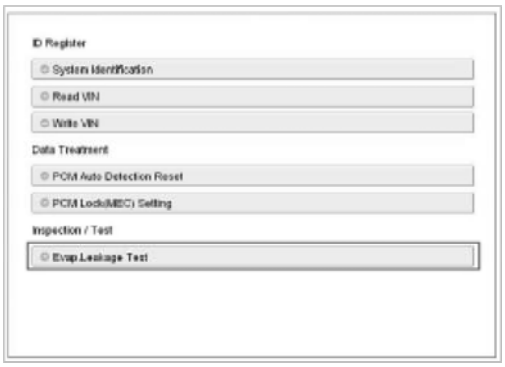

2. Proceed with the test according to the screen introductions.

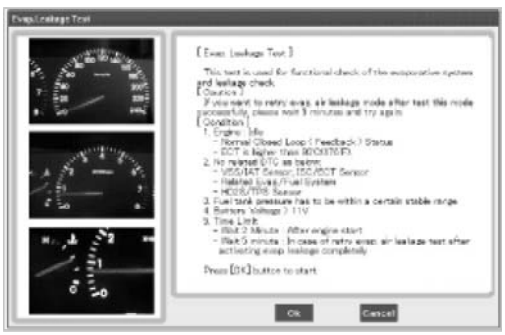

mcx30.com

procedures

Removal

1. Remove the fuel tank. (Refer to "Fuel tank" in FL group.)
2. Disconnect the vapor tube quick-connector (A,B) and the ventilation hose (C).
3. Remove the canister in the direction of an arrow after removing the installation screws (D).

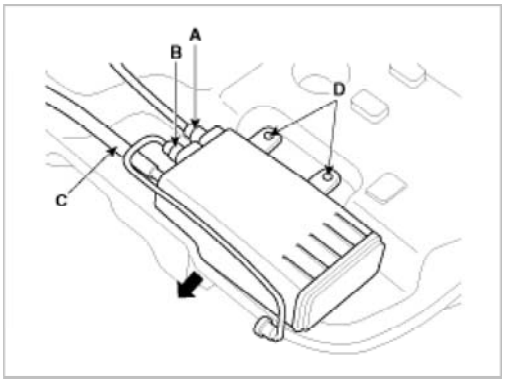

Inspection

1. Check for the following items visually.
   - Cracks or leakage of the canister
   - Loose connection, distortion, or damage of the vapor hose/tube

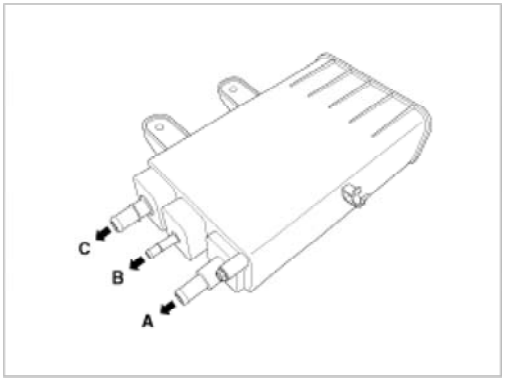

A: Canister ↔ Atmosphere
B: Canister ↔ Intake Manifold
C: Canister ↔ Fuel Tank

Installation

Installation is the reverse of removal.

Canister installation bolt/nut:
3.9 ~ 5.9 N.m (0.4 ~ 0.6 kgf.m, 2.9 ~ 4.3 lb-ft)

Emission Control System > Evaporative Emission Control System > Fuel Filler Cap > Description and Operation

Description

A ratchet tightening device on the threaded fuel filler cap reduces the chances of incorrect installation, which seals the fuel filler. After the gasket on the fuel filler cap and the filler neck flange contact each other, the ratchet produces a loud clicking noise indicating the seal has been set.

mcx30.com

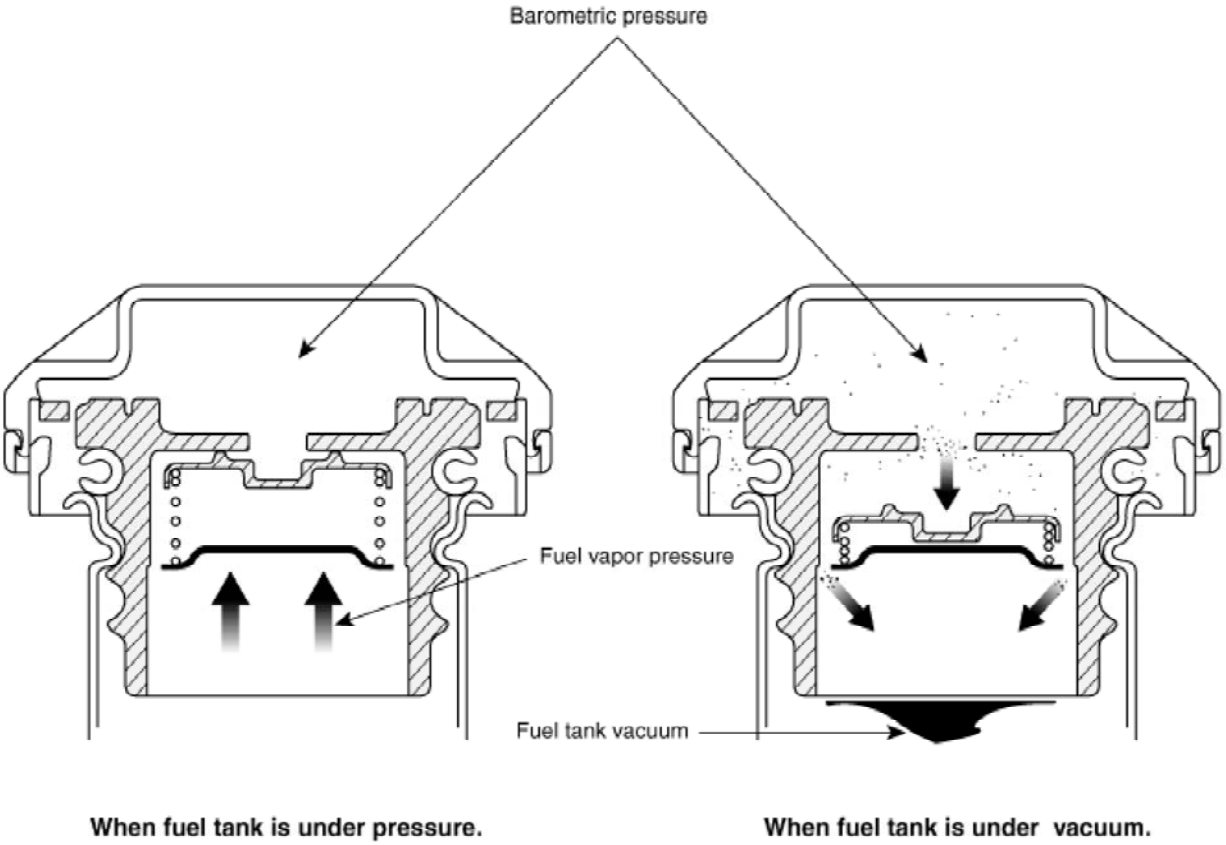

Emission Control System > Evaporative Emission Control System > Fuel Tank Air Filter > Repair procedures

Removal

1. Turn the ignition switch OFF and disconnect the battery negative (-) cable.
2. Lift the vehicle with a jack.
3. Disconnect the canister close valve connector (A).
4. Disconnect the ventilation hose (B) and vapor hose (C).

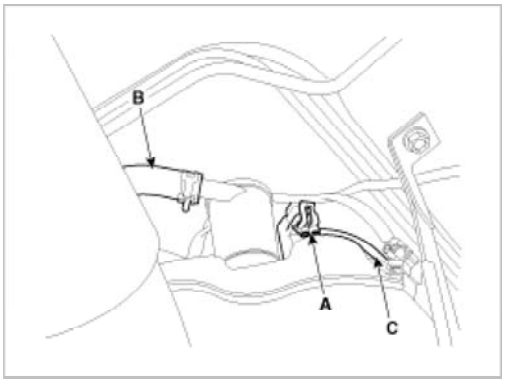

5. Remove the fuel tank air filter and canister close valve assembly (A) after removing the installation nut (B).

mcx30.com

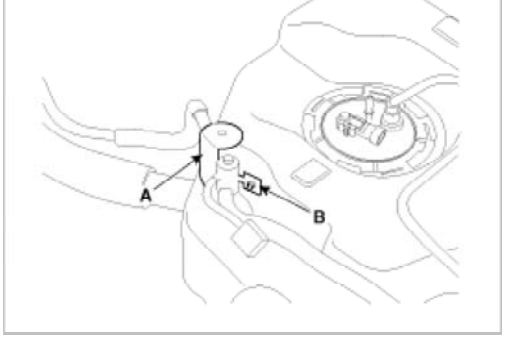

6. Release the lever (A), and then separate the canister close valve (B) from the fuel tank air filter (C) after rotating it in the direction of the arrow in the figure.

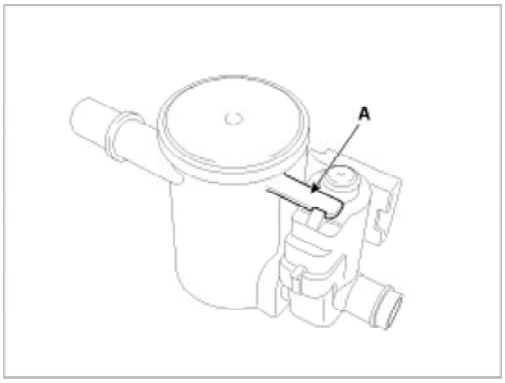

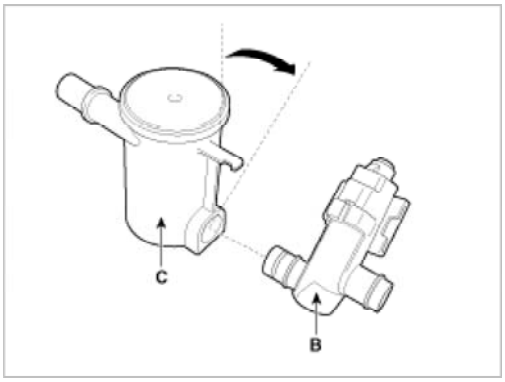

7. Install a new fuel tank air filter in accordance with the reverse order.

Emission Control System > Exhaust Emission Control System > Description and Operation

Description

Exhaust emissions (CO, HC, NOx) are controlled by a combination of engine modifications and the addition of special control components.
Modifications to the combustion chamber, intake manifold, camshaft and ignition system form the basic control system. These items have been integrated into a highly effective system which controls exhaust emissions while maintaining good drivability and fuel economy.

Air/Fuel Mixture Control System [Multiport Fuel Injection (MFI) System]

The MFI system uses signals from the heated oxygen sensor to activate and control the injector installed in the manifold for each cylinder, thus precisely regulating the air/fuel mixture ratio and reducing emissions.
This in turn allows the engine to produce exhaust gas of the proper composition to permit the use of a three way catalyst. The three way catalyst is designed to convert the three pollutants [hydrocarbons (HC), carbon monoxide (CO), and oxides of nitrogen (NOx)] into harmless substances. There are two operating modes in the MFI system.

1. Open Loop air/fuel ratio is controlled by information pre-programmed into the ECM.
2. Closed Loop air/fuel ratio is constantly adjusted by the ECM based on information supplied by the oxygen sensor.

mcx30.com

Description and Operation

Description

The catalytic converter of the gasoline engine is a three way catalyst. It oxidizes carbon monoxide and hydrocarbons (HC), and separates oxygen from the oxides of nitrogen (NOx).
There are two types of three-way catalyst; Palette type and Monolith type.
[SULEV]

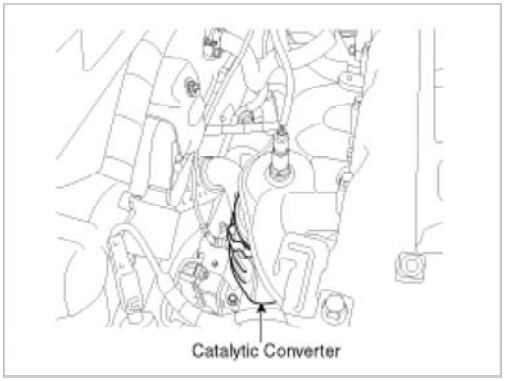

[ULEV]

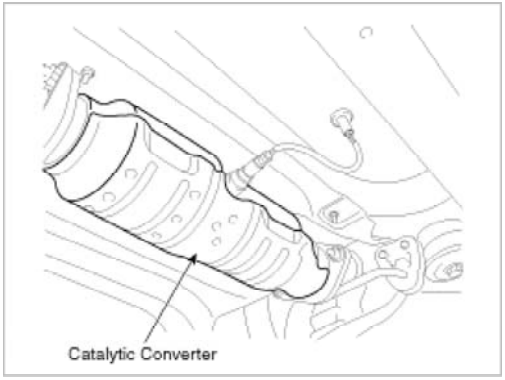

Emission Control System > Exhaust Emission Control System > CVVT (Continuously Variable Valve Timing) System > Description and Operation

Description

Continuous Variable Valve Timing (CVVT) system advances or retards the valve timing of the intake and exhaust valve in accordance with the ECM control signal which is calculated by the engine speed and load.
By controlling CVVT, the valve over-lap or under-lap occurs, which makes better fuel economy and reduces exhaust gases (NOx, HC) and improves engine performance through reduction of pumping loss, internal EGR effect, improvement of combustion stability, improvement of volumetric efficiency, and increase of expansion work.
This system consist of

- the CVVT Oil Control Valve (OCV) which supplies the engine oil to the cam phaser or runs out the engine oil from the cam phaser in accordance with the ECM PWM (Pulse With Modulation) control signal,
- the CVVT Oil Temperature Sensor (OTS) which measures the engine oil temperature,
- and the Cam Phaser which varies the cam phase by using the hydraulic force of the engine oil.

The engine oil getting out of the CVVT oil control valve varies the cam phase in the direction (Intake Advance/Exhaust Retard) or opposite direction (Intake Retard/Exhaust Advance) of the engine rotation by rotating the rotor connected with the camshaft inside the cam phaser.

mcx30.com

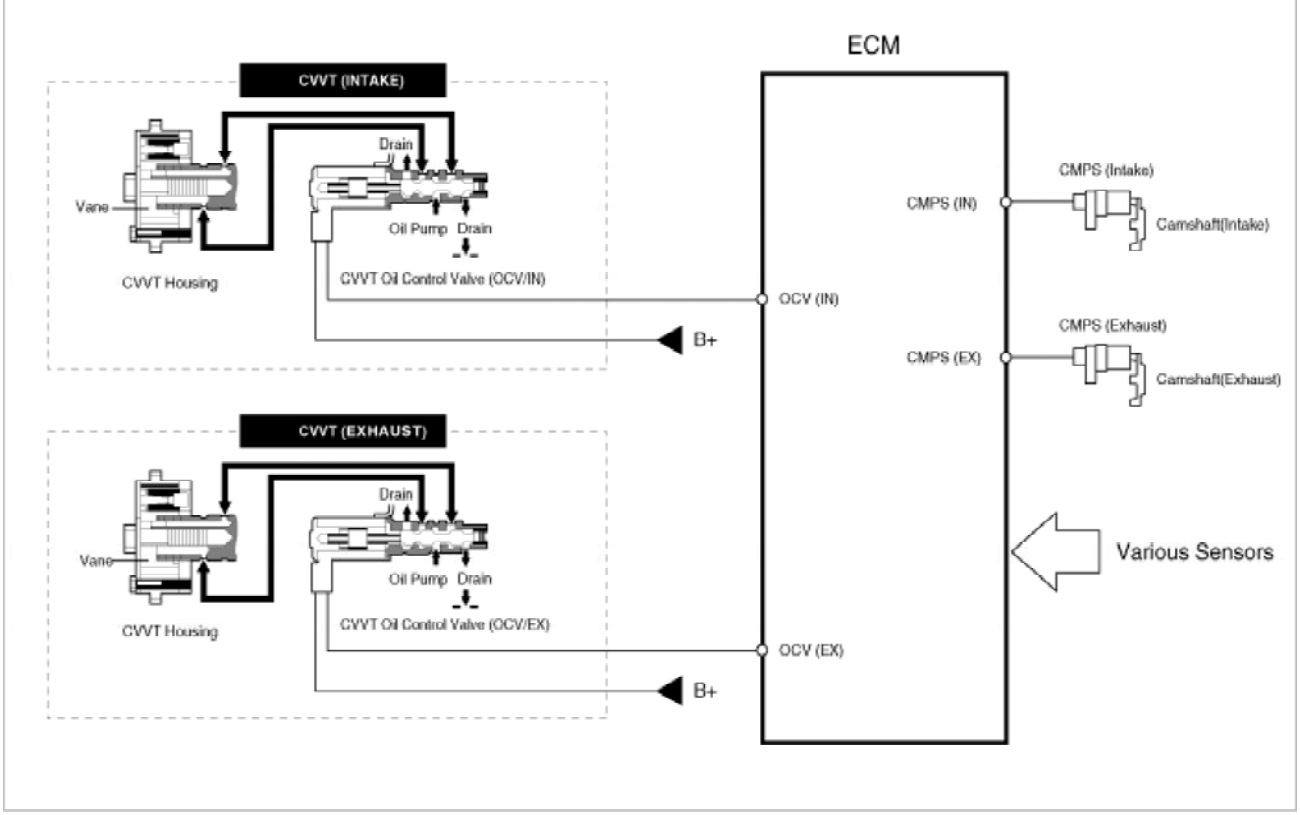

Operation Principle

The CVVT has the mechanism rotating the rotor vane with hydraulic force generated by the engine oil supplied to the advance or retard chamber in accordance with the CVVT oil control valve control.

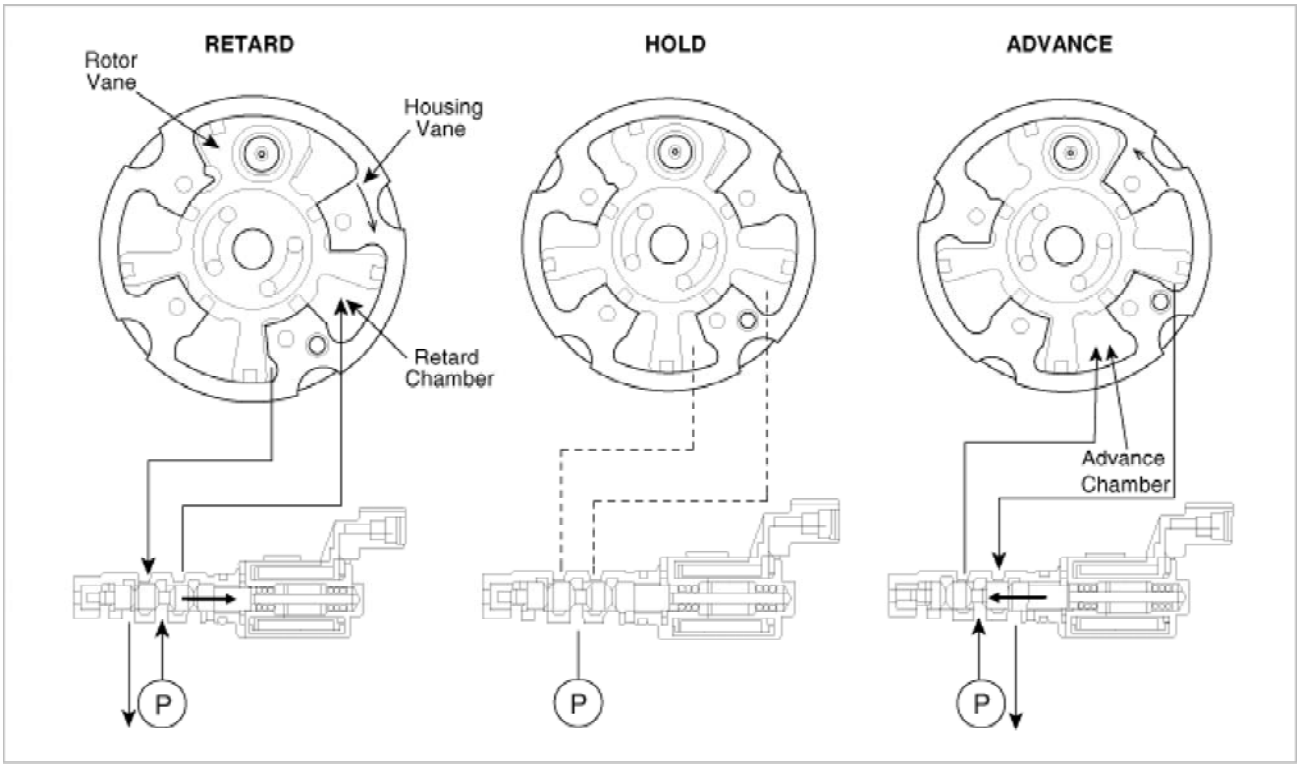

[CVVT System Mode]

mcx30.com

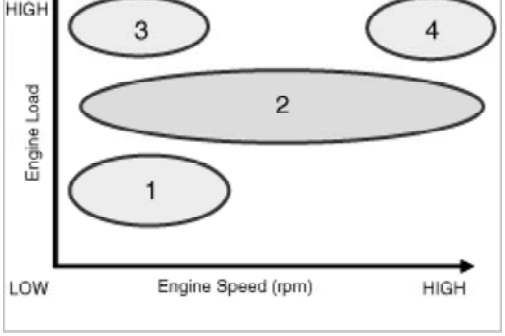

(1) Low Speed / Low Load	(2) Part Load
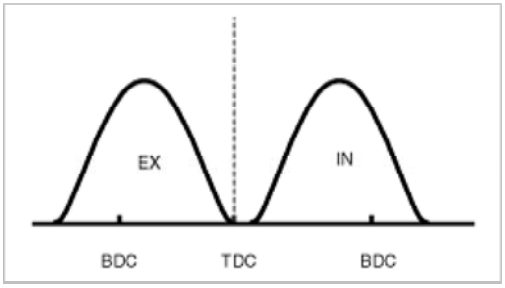	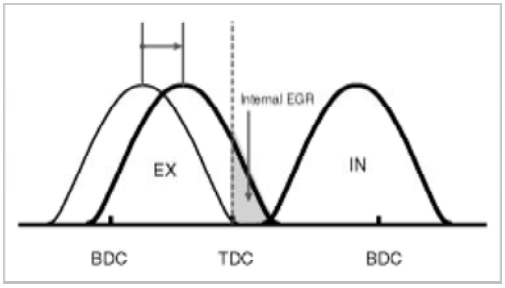
(3) Low Speed / High Load	(4) High Speed / High Load
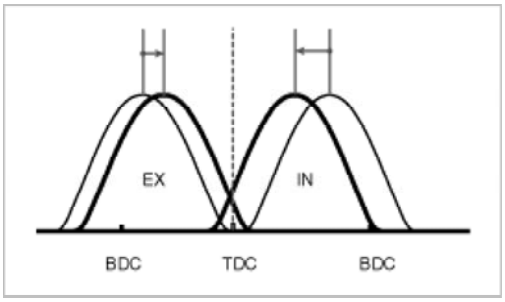	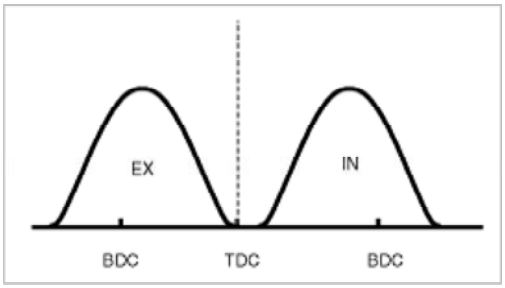

Driving Condition	Exhaust Valve		Intake Valve	
	Valve Timing	Effect	Valve Timing	Effect
(1) Low Speed /Low Load	Completely Advance	* Valve Under-lap * Improvement of combustion stability	Completely Retard	* Valve Under-lap * Improvement of combustion stability
(2) Part Load	Retard	* Increase of expansion work * Reduction of pumping loss * Reduction of HC	Retard	* Reduction of pumping loss
(3) Low Speed /High Load	Retard	* Increase of expansion work	Advance	* Prevention of intake back flow (Improvement of volumetric efficiency)
(4) High Speed /High Load	Advance	* Reduction of pumping loss	Retard	* Improvement of volumetric efficiency

mcx30.com